TRENZSEATER

MONT BLANC TABLE LAMP

The Montblanc Table Lamp brings refined industrial elegance to any interior. Crafted with a beautifully detailed knurled base in a rich bronze finish, this lamp balances tactile character with timeless sophistication. The precision knurling adds subtle texture and visual depth, catching the light and elevating the piece from functional lighting to sculptural accent.

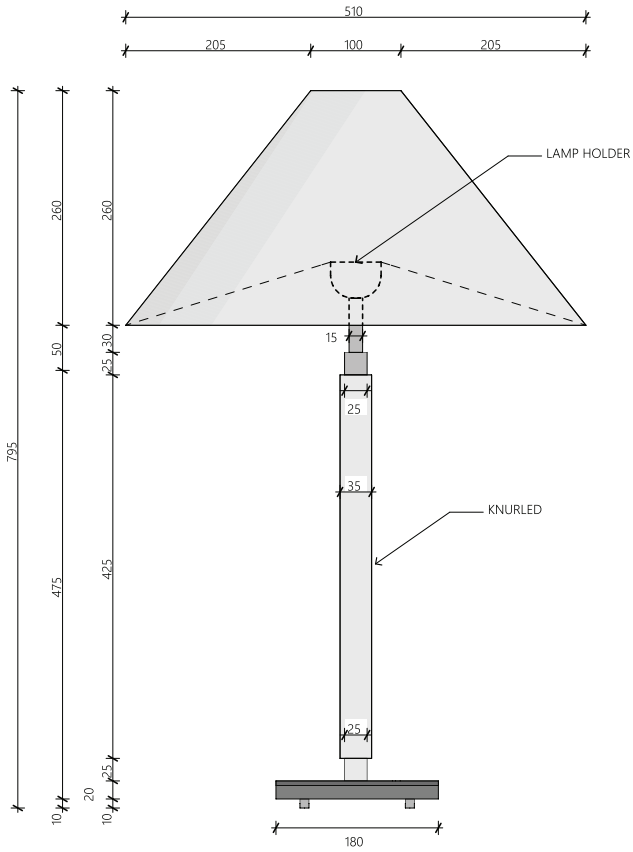

TECHNICAL INFORMATION

Dimensions: 795 x 510mm

Base 180mm dia

Finish: Bronze Knurled finish

E27 bulb

AUCKLAND 80 Parnell Road, Parnell, Auckland 1052, New Zealand **T.** (09) 303 4151
CHRISTCHURCH 121 Blenheim Road, Riccarton, Christchurch 8041, New Zealand **T.** (03) 343 0876
QUEENSTOWN - 313 Hawthorne Drive Frankton, Queenstown 9300, New Zealand **T.** (03) 441 2363
E. info@trenzseater.com **W.** www.trenzseater.com